R. A. Slingerland

Use of Foldable Containers in Garment on Hanger Transport

TU Delft

Use of Foldable Containers in Garment on Hanger Transport

By

R.A. Slingerland

Literature Assignment

in partial fulfilment of the requirements for the degree of

Master of Science
in Mechanical Engineering

at the Department Maritime and Transport Technology of Faculty Mechanical, Maritime and Materials Engineering of Delft University of Technology

Student number:	4301854
MSc track:	Multi-Machine Engineering
Report number:	2021.MME.8517
Supervisor:	Dr. ir. X. Jiang
Date:	April, 2021

TU Delft

Contents

Preface

This literature study is about the use of foldable containers in garment on hanger transport. I did this study as part of my master curriculum Mechanical Engineering track Multi-Machine Engineering and enjoyed the possibility of doing this study with HCI.

I would like to thank Ir. Arthur Meijers for his daily support during this assignment and introducing me at HCI. I appreciated the relaxed and dedicated way he helped me and enjoyed the practical container folding and unfolding sessions on the container depot.

I would like to thank Dr. ir. Xiaoli Jiang for supervising me, she really helped me getting the structure right and focus on the important topics.

I would like to thank Ir. Simon Bosschieter from HCI for his support on the CO2 and costs calculations and Nico Blaauw, Philip Phung and Guido van Bouwel for taking the time for an interview. I appreciated the experiences they shared about not only the formal rules and regulations but also about practices in the real world.

Ruben Slingerland

Abstract

Transport of garment in so called Garment on Hanger (GOH) containers could be cheaper and environmentally friendlier by reusing equipment and making use of a foldable container. This literature study aims to show to what extend this is possible. Three Garment on Hanger systems are distinguished, a one time use system, a modular system and a multiple use system mounted in the container. A fourth system is proposed by combining the multiple use system with the 4FOLD foldable container. Significant lower CO2 emission and costs are observed for the case Shanghai - Venlo - Shanghai and Shanghai - Stockholm - Shanghai, that takes into account the complete round trip.

List of abbreviations

- 4FOLD: A foldable 40' container manufactered by company HCI
- CCWG: Clean Cargo Working Group
- CMA-CGM: Compagnie Maritime d'Affrètement (CMA) and Compagnie Générale Maritime (CGM)
- CSC: International Convention for Safe Containers
- FEU: Forty-foot equivalent unit
- GHG: Greenhouse gas
- GLEC: Global Logistics Emissions Council
- GOH container: Garment on Hanger container. A dedicated container equipped for transport of garment on hangers.
- HCI: Holland Container Innovations B.V.
- ISO: International Organization for Standardization
- PE: Polyethylene
- TEU: Twenty-foot equivalent unit
- TTW: Tank-to-wheel
- USD: United States Dollar
- WTT: Well-to-tank
- WTW: Well-to-Wheel or Well-to-Wake

Introduction

Background

For the transport of luxurious garment, Garment on Hanger (GOH) containers are used. These containers have a system in which hangers can be hung directly on bars, strings or straps, in this way the space in the container is used optimally and the garment can keep in shape during transportation. Figure 1 shows the interior of one type Garment on Hanger container; the single bar system with strings. Figure 2 shows another type of GOH container, a double bar system that is being loaded. At the moment a big majority of the GOH equipement is used once and thrown away afterwards (Appendix A), resulting in higher carbon dioxide emissions and costs compared to a multi usable solution.

Figure 1: Interior of a single bar GOH container with nylon strings

Figure 2: Loading a double bar GOH container [12]

This literature study was initiated by the company Holland Container Innovations (HCI). The goal of this company, that started as a spin off from the Delft University of Technology, is to reduce empty container transport. On land about 40% of the transported containers are empty and on sea about 20% [1]. In order to do this HCI designed and produces the 4FOLD, a 40' foldable container that, in unfolded state, operates like a normal container and requires only a quarter of the volume in folded state (figure 3). This container is fully CSC [17] and ISO [22] certified. A bundle of 4 folded containers could be attached to each other by twistlocks and could hence be handled like one normal container. The company has launched about 60 containers of the newest generation 4FOLD and aims to grow in the coming years. Currently the company's focus is on trade routes where the container is going back and forth between place of departure and destination. This is the case in for example the transportation of garment from Asia to Europe. Based on the higher price of transport from Asia to Europe than from Europe to Asia [6], there is a potential added value for a foldable container in this trade route. For this reason HCI investigates the possibilities to use the 4FOLD container as a Garment on Hanger container.

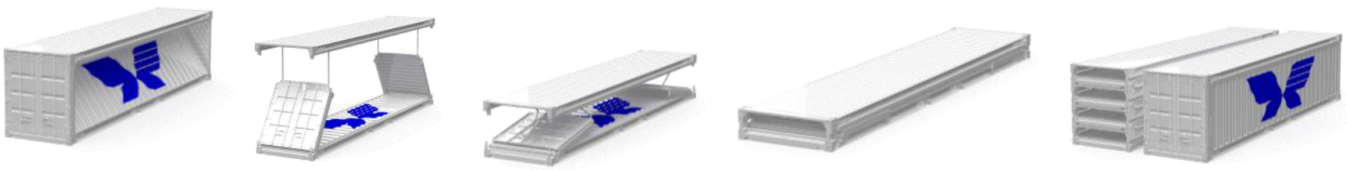

Figure 3: Folding procedure of the 4FOLD foldable container [1]

Research goal

This literature study aims to give an answer on the question: To what extend could a foldable container contribute to a cheaper and environmentally friendly garment on hanger transport? To answer this question an overview of the available procedures that are used to transform a container into a Garment on Hanger container is given, an estimate of the cost and the carbon dioxide emissions for each of those procedures is made and ways are found in which this operation could be made more durable in terms of cost and carbon dioxide emissions.

Methods

Literature is studied on the various constraints that needed to be met for the transportation of garment. Hence different companies are contacted and interviewed about their Garment on Hanger equipment. See Appendix A for the content of those interviews. Literature is studied on how to determine CO2 emissions and finally the CO2 emissions and the costs are calculated for two specific cases. First the case Shanghai - Venlo - Shanghai. where Garment is transported from Shanghai to Venlo and the container is retoured to Shanghai afterwards. Second Shanghai - Stockholm - Shanghai, that requires a short sea vessel and the corresponding container handling operations.

Scope

This study focuses on the Garment on Hanger equipment, not on the container itself. This means that the production of the container is not taken into account. The Garment on Hanger equipment is reviewed from production to disposal. The experiences of two shipping lines are considered, Maersk and CMA-CGM, furthermore the experience of a Garment on Hanger production company Pbox is taken into account.

Garment transport constraints

For the transportation of garment in a container, different constraints need to be met. In this chapter the question is addressed why garment is transported in garment on hanger containers.

Avoid creasing

The transported garment should remain its shape as best as possible. Garment can be transported in different configurations. Garment can be folded and put in boxes, in this way it can be shipped in a regular container. Before packaging the the garment needs to be folded and at the destination it needs to be unfolded and ironed. Another option is to make use of a Garment on Hanger container. In this way the garment will keep in shape and there is no need for ironing afterwards.

Air humidity constraints

For the transport of garments it is important that the garments will keep dry. There is always a small portion of water vapor in the air, for cold, dry air this is approximately $3g/m^3$ and for warm humid air approximately $30g/m^3$ [9]. The saturation content of water vapor depends on the temperature, according to figure 4. This is a Mollier diagram, the lines running from the bottom left to the top right represent different relative humidity lines, the bottom line indicates 100% humidity. The horizontal axis shows the relative weight of water vapor or condensate and the vertical axis the temperature. To give an example, a 40' containers volume is approximately $70m^2$ [16]. If the temperature at the loading location is $30°C$ and the humidity is 80%, the amount of water vapor is 11.4 g/kg dry air. The interior of the container is wrapped in poly vinyl lining which closes the container from water vapor going in or out the container. At the coldest location during the trip where the temperature is $5°C$, the amount of water vapor is 5.2 g / kg dry air. This means that the the remaining 6.2 g / kg dry air has condensed. For a volume of $70m^3$ this is 1.3 litre. To give an idea, if the condensation happens at the interior walls and the doors of the container a water layer of 0.04 mm would stick to the walls and doors. Those temperatures approximately correspond to a trip from China to Northern Europe. To prevent this condensation desiccant material like silica gel is used. The company PBox (Appendix A) uses various desiccant materials. Superdry [18] from Singapore, Drybag [10] from Danmark and Prodri [24] from South Africa.

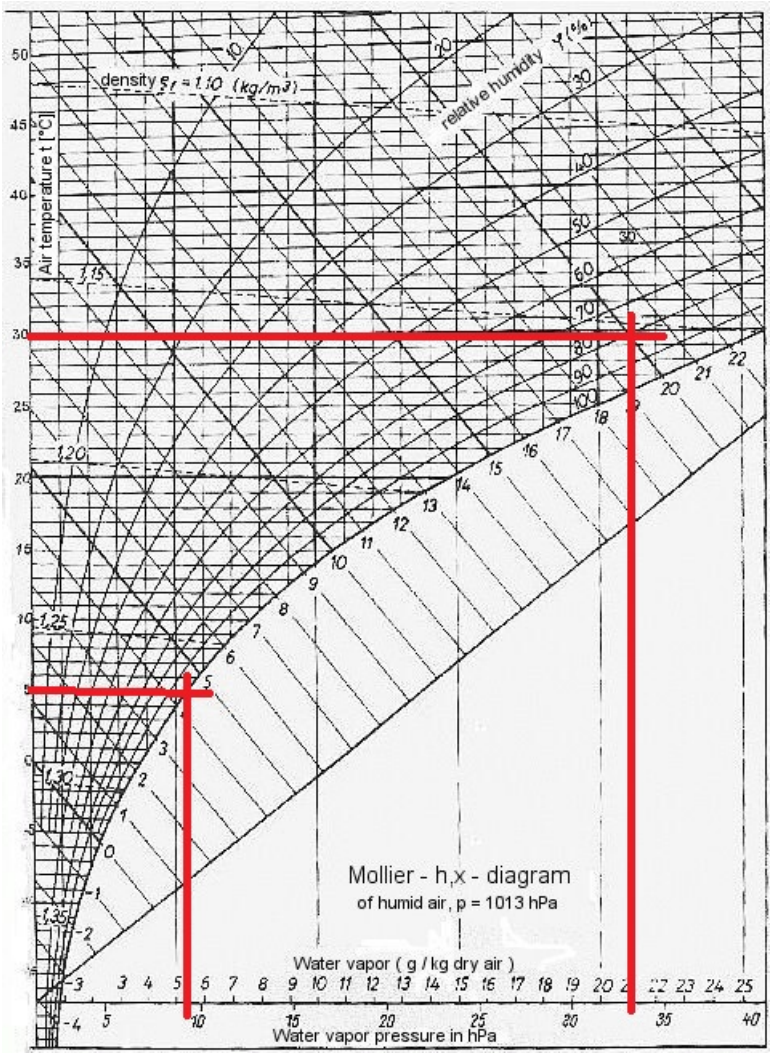

Figure 4: Mollier diagram, the lines running from the bottom left to the top right represent different relative humidity lines, the bottom line indicates 100% humidity. The horizontal axis shows the relative weight of water vapor or condensate and the vertical axis the temperature. Two points are indicated in red that represent the arrival position and the coldest location of the trip

Table 1: Amount of condensate for a 40' GOH container loaded at 35 °C with 80% relative humidity and unloaded at 5 °C

	Temperature (°C)	**Humidity (g/kg dry air)**	**Condensate (g/kg dry air)**	**Condensate 40' container (L)**
Loading location	35	11.4	0	0
Coldest location during trip	5	5.2	6.2	1.3

Garment on Hanger container systems

This chapter focuses on the available systems that are used for Garment on Hanger transport. Firstly the state of the art is given and secondly a proposal is made on how a foldable container could be applied as innovation of the state of the art.

State of the art

Figure 6 shows the operating process of different types of GOH container systems currently in use. First of all the one time use system, this system is thrown away after usage, this is the case for 95% of the GOH containers manufactered by PBox. (Appendix A) Shipping lines like Maersk and CMA-CGM use this system if their own dedicated containers are not available (Appendix B). Secondly there is the multiple use system mounted in a normal container, like for example the Maersk Hangertainer (Appendix B). Thirdly there is the modular system; GOH equipment is send back and reused in another container, the company Green-GOH offers such a solution [13][14] and shipping lines use it as well. The Green-GOH construction can be derigged in 20 minutes, it is collapsable and can be stored outdoor in a small space. It is reusable up to 10 times. Instead of Silica gel, this company uses their own desiccant product and claims to reach a water absorbency of almost 280%. [13]

PBox uses various Garment on Hanger container systems. For all of them the interior is wrapped in polyethylene (PE) lining and on the floor is a thicker loading canvas. Silica gel pouches are hung in the container that are able to absorb humidity in the air.
The string system consists of hanger beams at the container roof and nylon strings attached to those beams. A standard 20' container consists of 11 beams and 15 strings per beam, 15 knots per string and 5 items can be hung on each knot. This means that more than 12000 pieces of garment can be transported in such a container. A 40' container could have 22 beams resulting in a maximum of 24000 pieces of garment in one container. Figure 5 shows the various components of the string system.
The strap systems uses straps and instead of strings, attached to the hanger beams, the garment is hung on sewn sections of the straps. This system is more expensive, however lighter and stronger than strings. Straps are also less elastic and therefore are better suitable for heavy clothes.
In the double bar system the garment is hung directly on the hanger bars. For garments that require more space this is ideal. Multiple levels of bars are used that require a strong frame. A standard 20' container with two tiers has 11 bars on each tier and could, for example, give space to 7200 ladies dresses. For a 40' container the available space is doubled.
A last option is to use a combined system. One part of the container is used for garment on hangers and the other parts for carton packs. A partition is installed in between to prevent carton packs to damage the hanging garment. [12]

Figure 5: A GOH container ready for transport [12]

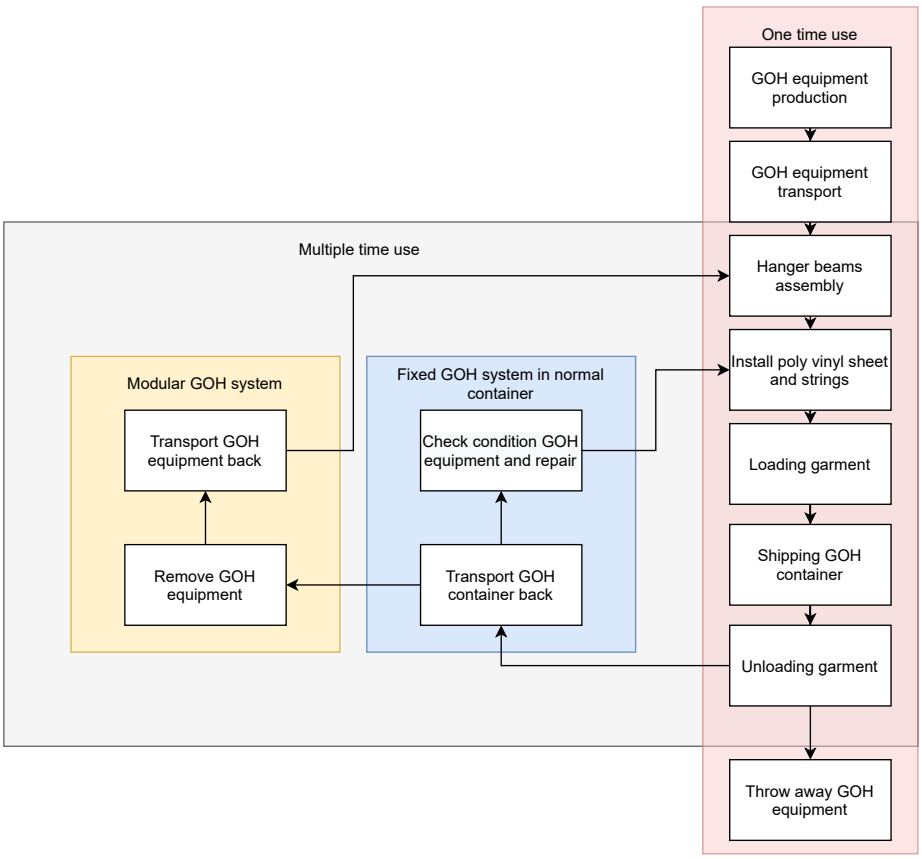

Figure 6: GOH container systems state of the art

Innovation proposal

A new GOH system is proposed in figure 9 by combining a multiple use GOH system in a 4FOLD foldable container. The hanger beams as well as the poly vinyl at the roof are able to keep in place. The strings can be reused as well. The state of the poly vinyl on the floor and walls may damage during transportation back in the folded state. If that is the case, new poly vinyl sheet is needed. Figure 7 shows four folded 4FOLD containers in a bundle. In the open space under the roof of each container hanger beams could be placed, like can be seen in figure 8.

Figure 7: A bundle of 4 folded 4FOLD containers, the space under the roof of the container in folded state gives space to fixed hanger beams [1]

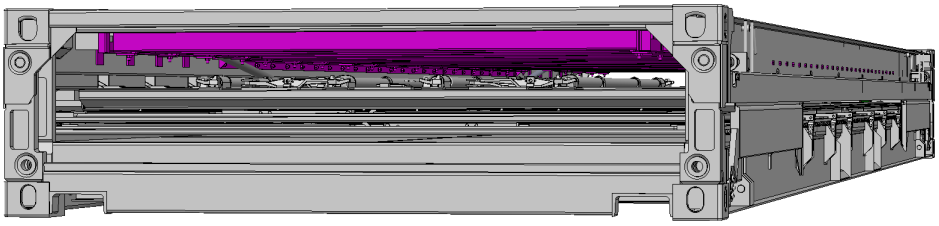

Figure 8: Hangerbeams (purple) inside a folded 4FOLD container

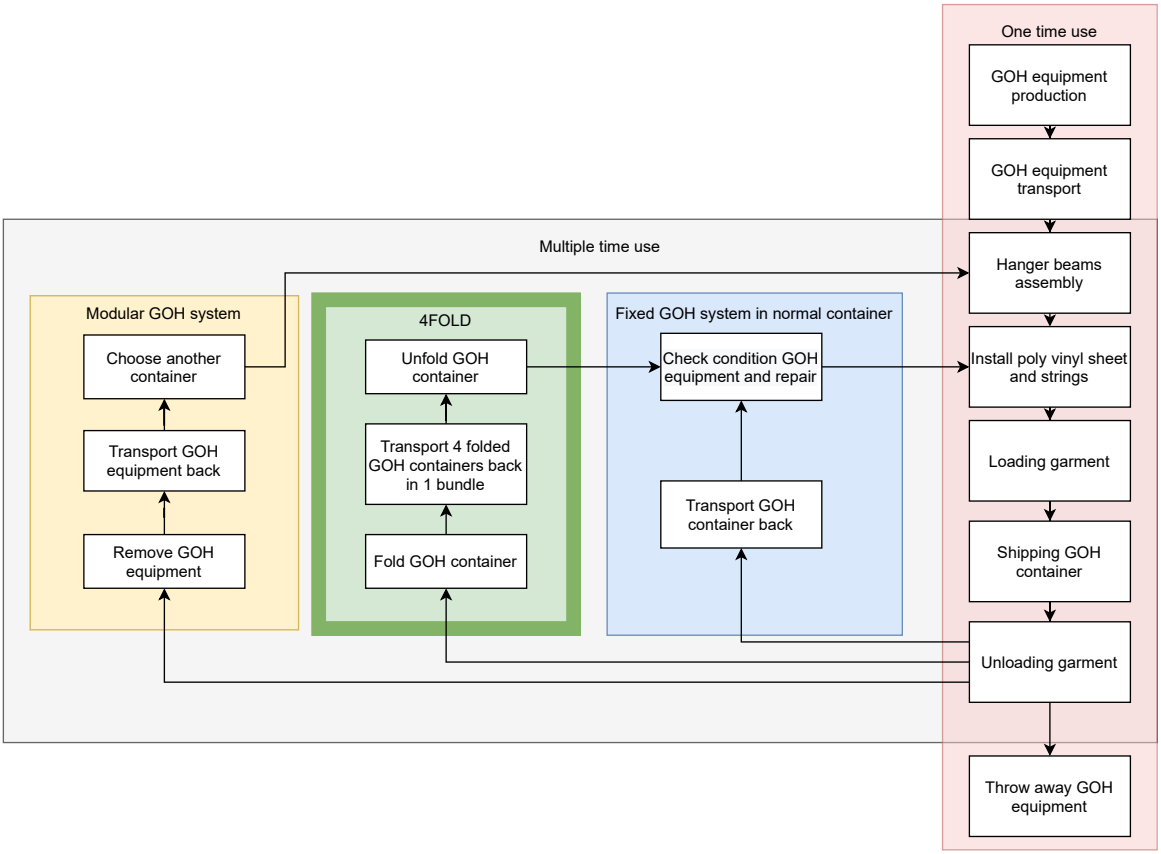

Figure 9: GOH container systems flowchart including innovative 4FOLD solution

GOH container assembly procedures

Based on practices at PBox [12], Maersk (Appendix B), CMA-CGM [7], Maggallan logistics [2], the following procedures are defined for assembly of Garment on Hanger containers. Furthermore the use of the 4FOLD foldable container is taken into account as an option.

For this research the modular GOH container system is not included due to the increased complexity. After a modular GOH kit is removed from the container, the container is used for something else, this makes it hard to compare this modular system with the other systems. For simplicity only 40' containers are considered.

Procedure A (one time use)

1. Mount steel angle bar rails on lashing rings (See Appendix B)
2. Cover container roof and walls with poly vinyl sheet to protect garment from dirt and moisture
3. Clean hanger beam before mounting
4. Mount hanger beam on steel angle bars
5. Hang nylon strings on hanger beam and add desiccant material
6. Cover containers' floor and door with poly vinyl sheet
7. Place a GOH sticker for easy pick up at container depot
8. Fasten security door seal to protect hanging equipment

Procedure B (multiple use normal container)

If the GOH container is reused skip step 1 and 3

1. Mount steel angle bar on the top rail with 6.4 mm closed stainless steel pull rivots or monobolts and with 200 mm spacing (See Appendix B)
2. Clean hanger beam
3. Mount hanger beam on steel angle bars
4. Cover container roof and walls with poly vinyl sheet to protect garment from dirt and moisture
5. Hang nylon strings on hanger beams and add desiccant material
6. Cover containers' door with poly vinyl sheet
7. Place a GOH sticker for easy pick up at container depot
8. Fasten security door seal to protect hanging equipment

Procedure C (multiple use 4FOLD)

If the GOH container is reused skip step 2 and 4

1. Unfold 4FOLD container
2. Mount steel angle bar on the top rail with closed stainless steel pull rivots or monobolts and with 200 mm spacing (See Appendix B)
3. Clean hanger beams
4. Mount hanger beams on steel angle bars
5. Replace poly vinyl sheet and nylon strings if needed
6. Tape down the overlap of the poly vinyl sheet
7. Add desiccant material
8. Cover containers' door with poly vinyl sheet
9. Fasten security door seal to protect hanging equipment

Carbon dioxide emissions and costs

In order to determine in what way a foldable container could contribute to a decrease in carbon dioxide emissions and costs, firstly literature is studied on how carbon dioxide emissions are being determined. Secondly the corresponding costs of the single use system, multiple use system with a normal container and a multiple use system with the 4FOLD are studied and compared.

Methods to determine carbon dioxide emissions

Greenhouse gas (GHG) emissions can be determined using different methods. In order to compare various scenarios these methods should match and therefore frameworks like the Global Logistics Emissions Council (GLEC) [4] or Clean Cargo Working Group (CCWG) [21] are defined for logistic emissions.

In the GLEC framework, three emission scopes are defined. Scope 1 emissions include the direct emissions that come from assets owned or controlled by a specific company. Scope 2 emissions involve indirect emissions from production and distribution of electricity, heat or steam purchased by this company. Scope 3 emissions are indirect emissions from the supply chain. For this scope not only the emissions of the specific company count, but transportation from and to this company count as well [4]. For this study the goal was to give some insight in all three scopes for the production and transportation of GOH containers.

Furthermore fuel consumption can be classified in different scopes as well. The full climate impact is captured by the Well-to-Wheel (WTW) emission, or more general Well-to-Wake (which includes ships and airplanes). This emission exists of Well-to-Tank (WTT) and Tank-to-Wheel (TTW) emissions. TTW emissions only depend on the type of engine, the speed and the distance travelled, therefore this emission is easier to compute. The shipping line CMA-CGM facilitates an Eco Calculator [8] that calculates this TTW emissions. For the emission calculations an average speed is assumed, Olmer et al. [20] report that this average speed is increasing causing higher GHG emissions from 2013 to 2015.

To give insight in the amount of GHG emissions and costs for the use of a GOH container, two specific cases are taken. For the first one the Garment on Hanger container is produced and loaded with garment in Shanghai; from there it is transported by truck to the harbour. In the harbour the container is shipped to Rotterdam from which it is placed on a train to Venlo. A few last kilometers by truck are needed from the train transshipment point to the customer. For the second case the container starts in Shanghai as well and is shipped to Hamburg, from there another short sea vessel is needed for the transportation to Stockholm, in Stockholm the container is transported by truck to the customer. After unloading the container will travel back empty in the same way for both cases.

Carbon dioxide emission estimations

A comparison is made for three GOH systems, the one time use system, a multiple use solution for a normal container and the multiple use solution for the 4FOLD foldable container. The following assumptions have been made:

- Container can make 5 roundtrips per year and has a lifetime of 20 years, so the GOH container is used 100 times
- 50% of the poly vinyl sheet can be reused every time.
- The vessel emmissions are based on the total emission of the APL Changi [25] and divided by the amount of container slots. This results in the same emission for a full container and an empty container.
- The tare weight of a 40' normal container is 4000 kg
- The tare weight of a 4FOLD container is 5700 kg
- The load in the container is 10000 kg

Production emissions

First of all the production of the GOH equipment is taken into account. It is assumed that the GOH equipment is produced in China and that the amount of steel needed is 528 kg for a 40' GOH container (based on internal design HCI). The production of steel in China on average is 2148 kg CO2/tonne crude steel [15]. This number is based on results from 2010 and include the whole steel making process starting with coke making up to galvanizing or coating. The transport of the steel to the container and the assembly is covered by multiplying the emission by a

factor 1.1. The emissions of the poly vinyl sheet is computed using the study of Choi et al [5]. The production of the nylon strings or other possible hanger strings are neglected as well as the production of the desiccant material. Table 2 shows the CO2 emissions for the production of GOH equipment.

Table 2: CO2 emission GOH equipment due to production for one 40' container for three different GOH container systems

	CO2 (kg) normal container		**CO2 (kg) 4FOLD**
	One time use	**Multiple time use**	**4FOLD Multiple use**
Steel Production	1235	12	12
Poly vinyl sheet	43	22	22
TOTAL	1278	35	35

Transport emissions

Table 3 shows the CO2 emissions in kilograms for every piece of transshipment for the container going from Shanghai to Venlo with garment and returning emtpy in Shanghai again. Table 4 shows the same for the case Shanghai - Stockholm - Shanghai. The multiple use system has a slighty higher CO2 emission than the one time use, because of the weight of the GOH equipment that needs to be shipped back. For the 4FOLD a clear improvement could be seen regarding the return. For road transport 121 g/tkm CO2 can be assumed, this is taken from from the Stream report 2020 [23] by CE Delft [3] that takes 2018 as a reference. It takes into account the main greenhouse gases, namely: carbon dioxide, methane and nitrous oxide and expresses those as CO2-equivalents. The amount of emitted CO2 is obtained my multiplying this emission factor by the weight of the load and the actual distance traveled.

Table 3: CO2 emission (in kg) for the case Shanghai - Venlo - Shanghai for three different GOH container systems

			CO2 (kg) normal container		**CO2 (kg) 4FOLD**
Modality	**Route**	**Distance (km)**	**One time use**	**Multiple time use**	**4FOLD Multiple use**
Truck	Garment factory - Shanghai Port	100	177	177	197
Ship	Shanghai Port - Rotterdam Port	19471	1300	1300	1300
Train	Rotterdam Port - Venlo	200	29	29	32
Truck	Venlo - destination	8	14	14	16
Truck	destination - Venlo	8	4	4	2
Train	Venlo - Rotterdam Port	200	8	9	3
Ship	Rotterdam Port - Shanghai Port	19471	1300	1300	325
Truck	Shanghai Port - Garment factory	100	49	55	19
TOTAL		39558	2880	2888	1894

Table 4: CO2 emission (in kg) for the case Shanghai - Stockholm - Shanghai for three different GOH container systems

			CO2 (kg) normal container		**CO2 (kg) 4FOLD**
Modality	**Route**	**Distance (km)**	**One time use**	**Multiple time use**	**Multiple use**
Truck	Garment factory - Shanghai Port	100	177	177	197
Ship	Shanghai Port - Hamburg Port	20986	1401	1401	1401
Ship	Hamburg Port - Stockholm Port	963	64	64	64
Truck	Stockholm Port - destination	50	88	88	99
Truck	destination - Stockholm Port	50	24	28	9
Ship	Stockholm Port - Hamburg Port	963	64	64	16
Ship	Hamburg Port - Shanghai Port	20986	1401	1401	350
Truck	Shanghai Port - Garment factory	100	49	55	19
TOTAL		44198	3269	3279	2156

Total emissions

Combining the production of the GOH equipment and the transportation for the different cases results in the total emissions for the use of a Garment on Hanger container (Table 5 and table 6). If the GOH equipment is thrown away after use, the production of the GOH equipment accounts for 31% of the CO2 emissions of the whole trip for the case Shanghai - Venlo - Shanghai and for 28% for the case Shanghai - Stockholm - Shanghai. Comparing the total emissions of the 4FOLD GOH container with the one time use system results in 46% less CO2 emission.

Table 5: Total CO2 emission (in kg) for production and case Shanghai - Venlo - Shanghai

	CO2 (kg) normal container		**CO2 (kg) 4FOLD**
GOH equipment	**One time use**	**Multiple time use**	**4FOLD Multiple use**
Production	1278	34	34
Shanghai-Venlo-Shanghai	2880	2888	1894
TOTAL	4159	2922	1928
Saving	0%	30%	54%

Table 6: Total CO2 emission (in kg) for production and case Shanghai - Stockholm - Shanghai

	CO2 (kg) normal container		**CO2 (kg) 4FOLD**
GOH equipment	**One time use**	**Multiple time use**	**4FOLD Multiple use**
Production	1278	34	34
Shanghai-Stockholm-Shanghai	3269	3279	2156
TOTAL	4547	3312	2190
Saving	0%	27%	52%

Cost estimation

Similar to the carbon dioxide emissions, an estimate is made for the costs as well. Table 7 shows the costs for the production of the GOH equipment. The cost of the steel beams and angle bars are based on the current steel price [11]. The poly vinyl sheet, strings and dessiccant material are rough estimations. The labour cost is based on the interview of PBox (Appendix A) and labour cost in China [19]. The shipping costs and terminal handling costs are based on internal business case of HCI from February 2021.

Table 7: Costs for the production of GOH equipment

	costs (USD)
Steel beams and angle bars	504
Poly vinyl sheet and strings	20
Desiccant material	50
Labour	26
TOTAL	600

Table 7, 8 and 9 show that the costs for producing the GOH equipment are only 18% of the total costs for a normal container for the case Shanghai - Venlo - Shanghai. For the case Shanghai - Stockholm - Shanghai this is 13%.

Table 8: Cost calculations for a normal container and a 4FOLD foldable container for the case Shanghai - Venlo - Shanghai

Modality	**Action**	**Distance (km)**	**Normal container costs (USD)**	**4FOLD costs (USD)**	**Saving (USD)**
Truck	Garment factory - Shanghai Port	100	200	200	0
	Shanghai terminal		150	150	0
Ship	Shanghai Port - Rotterdam Port	19471	1400	1400	0
	Rotterdam terminal		230	230	0
Train	Rotterdam Port - Venlo	200	200	200	0
Truck	Venlo - destination	8	50	50	0
Truck	destination - depot	5	35	35	0
	Folding container		0	50	-50
	Storage depot		35	9	26
Train	Venlo - Rotterdam Port	200	100	25	75
	Rotterdam terminal		215	54	161
Ship	Rotterdam Port - Shanghai Port	19471	600	150	450
Truck	Shanghai Port - Garment factory	100	180	45	135
	Unfolding container		0	35	-35
TOTAL		39558	3395	2633	762

Table 9: Cost calculations for a normal container and a 4FOLD foldable container for the case Shanghai - Stockholm -Shanghai

Modality	Action	Distance (km)	Normal container costs (USD)	4FOLD costs (USD)	Saving (USD)
Truck	Garment factory - Shanghai Port	100	200	200	0
	Shanghai terminal		150	150	0
Ship	Shanghai Port - Hamburg Port	20986	1450	1450	0
	Hamburg terminal		280	280	0
Ship	Hamburg Port - Stockholm Port	963	200	200	0
	Stockholm terminal		215	215	0
Truck	Stockholm Port - destination	50	120	120	0
Truck	destination - Stockholm Port	50	120	120	0
	Folding container		0	50	-50
	Storage depot		35	9	26
Ship	Stockholm Port - Hamburg Port	963	200	50	150
	Hamburg terminal		215	54	161
Ship	Hamburg Port - Shanghai Port	20986	700	175	525
Truck	Shanghai Port - Garment factory	100	180	45	135
	Unfolding container		0	35	-35
TOTAL		44198	4065	3153	913

Total costs

Table 10 and 11 show the total costs for the two cases for the one time use system, multiple time use system and 4FOLD multiple time use system.

Table 10: Total costs for case Shanghai - Venlo - Shanghai

GOH equipment	Costs (USD) normal container One time use	Multiple time use	Costs (USD) 4FOLD 4FOLD Multiple use
Production	600	70	70
Shanghai - Venlo - Shanghai	3395	3395	2633
TOTAL	3995	3465	2703
Saving	0%	13%	32%

Table 11: Total costs for case Shanghai - Stockholm - Shanghai

GOH equipment	Costs (USD) normal container One time use	Multiple time use	Costs (USD) 4FOLD 4FOLD Multiple use
Production	600	70	70
Shanghai - Stockholm - Shanghai	4065	4065	3153
TOTAL	4665	4135	3223
Saving	0%	11%	31%

Conclusion

This literature study aimed to give an overview of the available procedures that are used to transform a container into a Garment on Hanger (GOH) container, estimate the cost and the carbon dioxide emissions for each of those procedures and find ways in which this operation could be made more durable in terms of cost and carbon dioxide emissions. The question was addressed to what extend a foldable container could contribute to a cheaper and environmentally friendly garment on hanger transport.

For the transportation of garment, a Garment on Hanger container is an efficient solution to keep the garment in shape and for easy loading and unloading without the need of ironing afterwards. The big shipping lines offer GOH containers to their customers, however not always in a durable way. This study shows that there are three main GOH systems, a fixed multiple use system like Maersk Hangertainer, a modular GOH system that can easily be taken in and out of the container like Green-GOH and a one time use system that is implemented by for example PBox and thrown away after use. It is shown for the case that the GOH equipment is placed in the container in Shanghai and shipped with garment to Venlo in the Netherlands, the production of the GOH equipment accounts for 46% of the CO2 emissions of the whole trip if the GOH equipment is thrown away after use and the retour of the container is not taken into account. Taking into account the retour, the production of the GOH equipment accounts for 31% of the CO2 emissions of the whole trip for the case Shanghai - Venlo - Shanghai and for 28% for the case Shanghai - Stockholm - Shanghai.

Concerning the costs, the production of the GOH equipment is about 15% of the total price for a one time use container for the case Shanghai - Venlo - Shanghai.

In order to further decrease the costs and the carbon dioxide emissions a new system is proposed by combining a fixed multiple use system like the Maersk Hangertainer with the 4FOLD foldable container. Comparing the total emissions of the 4FOLD GOH container with the one time use system results in 46% less CO2 emission.

Using a 4FOLD container instead of a normal container saves 22% of the costs for both cases to Venlo and Stockholm. Table 12 shows the total savings, if the production of the GOH equipment is taken into account and compared with the one time use system that is thrown away after use.

Table 12: Savings (%) for the total CO2 emission and total costs for two different cases compared to the one time use system

	Saving CO2 normal container	**Saving CO2 4FOLD**	**Saving costs normal container**	**Saving costs 4FOLD**
Shanghai-Venlo-Shanghai	30%	54%	13%	32%
Shanghai-Stockholm-Shanghai	27%	52%	11%	31%

This study shows the potential of decreasing the garment transport carbon footprint and costs by reusing the GOH equipment or a part of this equipment multiple times. In the case that the GOH equipment is used multiple times in a foldable 4FOLD container, this potential is even higher. The two scenarios from Shanghai to Venlo and Stockholm give an estimate to what extend a foldable container could contribute to a cheaper and environmentally friendly garment on hanger transport.

Recommendations

Different topics for further study are obtained from this literature study.

The design of robust multible usable GOH equipment

In folded state, the mounted poly vinyl sheet and strings could damage, which means new material needs to be placed before loading new garment. A design upgrade could be made in the 4FOLD container design that is fully closed in folded state. An alternative would be to take off the sheet and strings and store those somewhere else or integrate them in the steel hanger beams that could remain in place.

Determine CO2 emission and costs for the modular GOH system

In this study the modular GOH system was not taken into account due to the increased complexity. Unlike the other discussed systems, the container containing the modular GOH equipment can be used for something else rather than shipping garment on the same trade route. It would be recommended however to make an estimate for the CO2 emissions and costs of this system, since this might be a promising option as well.

CO2 estimation

The process of determining CO2 emissions for foldable container transport could be studied further. In this study it is assumed that the emissions could be divided by four in folded state. This does not take into account the increased mass compared to an empty container. Normal containers could be used for something else instead of going back empty, which results in higher utility. More research has to be done to quantify the emissions of a foldable container. An interesting case would be as well to study the emission if each container would be a foldable.

References

[1] *4FOLD - The Foldable Shipping Container - Home*. en-US. URL: https://4foldcontainers.com/ (visited on 03/31/2021).

[2] Joe Carbone. *Decide the best garment shipping method*. en-AU. Oct. 2016. URL: https://www.magellanlogistics.com.au/garment-shipping/ (visited on 03/19/2021).

[3] *CE Delft*. en. URL: https://www.cedelft.eu/en (visited on 04/07/2021).

[4] Smart Freight Centre. *Global Logistics Emissions Council Framework for Logistics Emissions Accounting and Reporting*. 2019.

[5] Bulim Choi, Seungwoo Yoo, and Su-il Park. "Carbon Footprint of Packaging Films Made from LDPE, PLA, and PLA/PBAT Blends in South Korea". en. In: *Sustainability* 10.7 (July 2018). Number: 7 Publisher: Multidisciplinary Digital Publishing Institute, p. 2369. DOI: 10.3390/su10072369. URL: https://www.mdpi.com/2071-1050/10/7/2369 (visited on 02/16/2021).

[6] *CMA CGM | Public Prices Finder - Search*. URL: https://www.cma-cgm.com/ebusiness/prices-finder (visited on 04/09/2021).

[7] CMA-CGM. *CMA CGM | CONTAINER garment ready*. URL: https://www.cma-cgm.com/services/container-garment-ready (visited on 03/19/2021).

[8] CMA-CGM. *CMA CGM | Eco Calculator*. URL: https://www.cma-cgm.com/ebusiness/schedules/eco-calculator (visited on 03/18/2021).

[9] Gesamtverband der Deutschen Versicherungswirtschaft e. V. (GDV). *Container Handbook*. en. URL: https://www.containerhandbuch.de/.

[10] *Dry Bag*. URL: http://dry-bag.dk/ (visited on 03/30/2021).

[11] *Finished-Steel Price Chart,China Finished-Steel Price Today-Shanghai Metals Market*. URL: https://price.metal.com/Finished-Steel (visited on 04/12/2021).

[12] *Garment On Hanger | Pbox | Ho Chi Minh City*. en. URL: https://www.pbox.co (visited on 03/31/2021).

[13] *Goods On Hanger – Green GOH | CML - Core Management Logistics*. URL: https://www.cmlplc.com/services/goods-on-hanger/ (visited on 02/10/2021).

[14] *GREEN GOH – Next Level Logistics*. de-DE. URL: https://green-goh.com/ (visited on 03/04/2021).

[15] Ali Hasanbeigi et al. "Comparison of carbon dioxide emissions intensity of steel production in China, Germany, Mexico, and the United States". en. In: *Resources, Conservation and Recycling* 113 (Oct. 2016), pp. 127–139. ISSN: 0921-3449. DOI: 10.1016/j.resconrec.2016.06.008. URL: https://www.sciencedirect.com/science/article/pii/S0921344916301458 (visited on 02/25/2021).

[16] iContainers. *40-foot Container - Dimensions, Measurements and Weight*. en. 0. URL: https://www.icontainers.com/help/40-foot-container/ (visited on 03/30/2021).

[17] *International Convention for Safe Containers (CSC)*. URL: https://www.imo.org/en/About/Conventions/Pages/International-Convention-for-Safe-Containers-(CSC).aspx (visited on 04/09/2021).

[18] Super Dry International Pte Ltd. *Super Dry International Pte Ltd - Container Desiccants*. zxx. URL: https://www.superdry.com.sg/container-desiccants (visited on 03/30/2021).

[19] *Manufacturing labor costs per hour: China, Vietnam, Mexico 2016-2020*. en. URL: https://www.statista.com/statistics/744071/manufacturing-labor-costs-per-hour-china-vietnam-mexico/ (visited on 04/12/2021).

[20] Naya Olmer et al. "Greenhouse gas emissions from global shipping, 2013–2015". en. In: (), p. 38.

[21] Business for Social Responsibility. *Clean Cargo Working Group Carbon Emissions Accounting Methodology*. June 2015. URL: https://www.bsr.org/reports/BSR_CCWG_Carbon_Emissions_Methodology_2015.pdf (visited on 03/18/2021).

[22] International Organization for Standardization. *Series 1 freight containers — Specification and testing - Part 1: General cargo containers for general purposes (ISO Standard No. 1496-1)*. July 2013.

[23] *STREAM Goederenvervoer 2016*. nl. URL: https://www.ce.nl/publicatie/stream_goederenvervoer_2016/1854 (visited on 02/18/2021).

[24] Bert-Louw Versfeld. *ProDri Finished Product Specification*. July 2019. URL: https://andersonlid.com/wp-content/uploads/2019/03/FPS-PD2000SP01H.pdf.

[25] *Vessel fleet - apl-changi*. URL: https://www.cmacgm-group.com/en/group/at-a-glance/fleet/ships/9631981/apl-changi (visited on 04/14/2021).

Appendix A - Interviews

Maersk

Nico Blaauw
Feb 16th 2021

Does Maersk recycle the materials used for the GOH equipment?
Yes, a part of the Garment on Hanger containers is send back empty to Asia with the GOH equipment still inside. In Asia the plastic and hangerbeams are checked and if in good state are used another time.

What happens with the GOH equipment if the container should be used for something else?
For containers that are needed for other goods, the hangerbeams are taken out of the container and send back in another container to Asia. The plastic is thrown away, but the hangerbeams are used again.

Some customers use their own GOH equipment, which is not compatible with the Maersk hangerbeam system. Since the customer is asked to hand in the container emty, this GOH equipment is thrown away.

If the GOH container is used for the second time, do you keep plastic lining behind the hanger beams in place, or do you rebuilt the whole construction again?
That is checked on site, if the plastic is in good shape, the hanger beams are kept in place.

Which requirements do you set for a container to use it as a GOH container?
The container needs to be dry and clean.

How much time do you need to build the GOH equipment inside?
It depends on the system you are using, for our own system, we need 4 till 6 hours.

Wich material do you use to control air humidity?
I don't know.

How many percent of the containers has not only hangerbeams at the roof of the container but in the middle as well?
Almost all containers only have hangerbeams at the roof, ropes are mounted on the hangerbeams on which the garments are hung. We only use ropes, no straps.

PBox

Philip Phung, CEO
February, 20th

What procedure does PBOX use to transform a container into a Garment on Hanger container?
Pbox gives a full solution to the customer. We find a container, put GOH equipment in it and find a shipping line to send it to the destination. We are not the owner of the containers, which means that we have to deliver the container back in the same state as we got it. Therefore we do not drill holes in the container but instead mount the GOH equipment to the lashing rings in the container. One lashing ring can support 2 tons.

What material is used and in what way do you recycle the materials?
Steel for the beams, polyethylene for the lining and nylon strings or straps. We make two kinds of kits: the first one is for one time use and the second one is reusable up till 20 times. Currently 95% of all kits are for one time use, however our customers, the fashion houses, want less CO2 emissions and therefore they are happy that Pbox is busy with a reusable solution as well.

If you reuse the Garment on Hanger construction do you keep the hanger beams in place?
We are not the owner of the container, so we cannot keep the hanger beams in place.

What requirements do you set for a container to use it as Garment on Hanger container?
The container should be clean, dry, not smell and should have those lashing rings. For us the quality of the container is very important and we refuse a lot of containers.

What percentage of the Garment on Hanger container uses the double bar system?
Depends, last year 70% string system and 30% bar system. The bar system is used for the more luxury items that require more space. The hangers are hung directly on the bar instead of on strings. Also for heavy cloths the bar system is better, since the strings are elastic. Using the string system, however, we can transport 20% more load in a full container.

What price do you ask for one container?
For a 40' container we ask $650 and for a 20' the half of this price. Shipping lines ask about $1300 for the same as we do.

How much time do you need to assemble the garment on hanger container?
With 3 guys we need 1 hour for a 40' container.

What do you do with the Garment on Hanger construction if the container needs to be loaded with other goods?
We are not the owner of the container, so at the destination the GOH equipment is thrown away.

What material do you use to control humidity inside the container?
We use different materials, silica gel made in China, we work together with a company Superdry from Singapore,Drybag from Danmark and Prodri from South Africa. Different materials of garment require different types of desiccant.

CMA-CGM

Guido van Bouwel
Feb 24th 2021

Which procedure does CMA-CGM use to transform a container into a Garment on Hanger container? CMA-CGM uses two systems. The first system is the official system, beams are attached to the containers on which the hangers are hung directly. Once this system is made in the container, the system stays in the container. The other system is the so called unofficial system, usually this system has a poorer quality and is made for one time use in China, Vietnam or India. After the garments arrive at the destination, this system is thrown away immediately.

If suddenly more container are needed, also the equipment from the first system is removed.

Which materials are being used?
Steel for the beams and plastic for the lining.

Where do the materials come from?
China

Which requirements are being set for a container to use it as a GOH container?
None

How much time do you need to build the GOH equipment into the container?
A couple of hours

What are the costs for building GOH equipment in a container?
For a 20' container somewhere between €50 and €100. For a 40' €250.

What happens with the GOH equipment if container should be used for something else?
The construction is thrown away, the steel is being recycled. Sometimes employees take the steel with them to build a shed or a chicken coop.

Which material is used to control air humidity in the container?
Bags with desiccant were used for that. There has been a development the recent years in this field. Currently not only bags are used, but the collected water is gathered in a tray.

Appendix B

Appendix B contains:

- **Maersk Hangertainer procedure (for multiple time use)**

  Maersk instruction for temporary conversion of Dry Containers to GOH Containers

- **Maersk Hangerbeam specifications**

MAERSK

17.07.2019

REF: HANGERTAINER.1

Equipment: HANGERTAINERS

The following Hanger System will be used for the Hanging garment cargo. Any other system as we generally know as black-rack system, or Reefer hangertainers are not be supported. CENEMR only have one unique approved design however we allow LOCEMR teams and commercial teams to engage with alternative design which must be tested and approved by LOCEMR managers. Any potential claims must be handled by local organization, in conjunction with LOCEMR managers.

MAERSK Hanger beam System

20' x 8' x 8'6'' Maersk Standard Hangertainer will have:

1. 10 or more pcs Maersk standard beams installed inside, depending on cargo.
2. Distance between the bars can be adjusted locally according to the hanging cargo.
3. Depending on weight use strings or straps.
4. The interior of each Hangertainer is covered with poly vinyl sheet min 0.05mm (semi-transparent plastic sheet) coverage: roof, floor, front part and two sides. Plastic sheets on two sides: leave enough extension to ensure garments are thoroughly wrapped and protected upon completion (see pictures in the guidelines).The plastic sheets must be taped properly to the rear-sill in order to avoid a Health and Safety hazard for personnel entering the container to load and unload.
5. Safe Working Load (SWL) is 1000 kg per beam.
6. If any request from the customer for desiccants at booking request, then this can be added at an additional charge. **Please note that Silica Gel as desiccant for GOH shipments is not allowed.**

40' x 8' x 8'6''/9'6'' Maersk standard Hangertainer will have:

1. 20 or more pcs Maersk standard beams installed inside, depending on cargo.
2. Distance between the bars can be adjusted locally according to the hanging cargo.
3. Depending on weight use strings or straps
4. The interior of each Hangertainer is covered with poly vinyl sheet min 0.05mm (semi-transparent plastic sheet) coverage: roof, floor, front part and two sides. Plastic sheets on two sides: leave enough extension to ensure garments are thoroughly wrapped and protected upon completion (see pictures in the guidelines). The plastic sheets must be taped properly to the rear-sill to avoid a Health and Safety hazard for personnel entering the container to load and unload.
5. Safe Working Load (SWL) is 1000 kg per beam.
6. If any request from the customer for desiccants at booking request, then this can be added at an additional charge. **Please note that Silica Gel as desiccant for GOH shipments is not allowed.**

45' x 8' x 9'6'' Maersk standard Hangertainer will have:

1. 22 or more pcs Maersk standard beams installed inside, depending on cargo.
2. Distance between the bars can be adjusted locally according to the hanging cargo.
3. Depending on total weight use strings or straps.
4. The interior of each Hangertainer is covered with poly vinyl sheet min0.05mm(semi-transparent plastic sheet) coverage: roof, floor, front part and two sides. Plastic sheets on two sides: leave enough extension to ensure garments are thoroughly wrapped and protected upon completion (see pictures in the guidelines). The plastic sheets must be taped properly to the rear-sill to avoid a Health and Safety hazard for personnel entering the container to load and unload.
5. Safe Working Load (SWL) is 1000 kg per beam.
6. If any request from the customer for desiccants at booking request, then this can be added at an additional charge. **Please note that Silica Gel as desiccant for GOH shipments is not allowed.**

Specification ropes:

Material:	Polyester
Thickness:	Min 4mm
Each rope:	10 Knots
Max weight per rope:	50 kg
Max weight per beam:	1000kg

Specification of Straps from Hong Kong or China:

Material:	Polypropylene
Stitching for each hook:	Min 2 times
Test weight each hook:	= 1.5 times cargo weight
Max weight per strap:	70 kg
Max weight per beam:	1000kg

Specification of Straps from India or Sri Lanka:

Material:	Polypropylene
Stitching for each hook:	Min 4 times
Test weight each hook:	= 1.5 times cargo weight.
Max weight per strap:	50 kg
Max weight per beam:	1000 kg

If replacement beams are required, then they must be manufactured in accordance to the specification as mentioned in the guidelines.

MERC+ STS codes available:

Mode	STS	Description
03	0821	20' Installation of garment rack, including longitudinal rails, transverse beams, strings or straps, protective sheeting as required
03	0822	40' Installation of garment rack, including longitudinal rails, transverse beams, strings or straps, protective sheeting as required
03	0823	45' Installation of garment rack, including longitudinal rails, transverse beams, strings or straps, protective sheeting as required
03	0831	20' Removal of garment rack, including longitudinal rails, transverse beams, strings or straps, protective sheeting as required
03	0832	40' Removal of garment rack, including longitudinal rails, transverse beams, strings or straps, protective sheeting as required
03	0833	45' Removal of garment rack, including longitudinal rails, transverse beams, strings or straps, protective sheeting as required

Material codes available in SAP:

Material Code	Material Description
HANG-000034	UNSTUFFING/STORAGE OF GARMENT RACK COMPONENTS INCL.CLEARING OF STRINGS/STRAPS
HANG-000033	PURCHASE OF GARMENT RACKS

Max 20 Ropes per bar.

Max 20 straps per bar for India

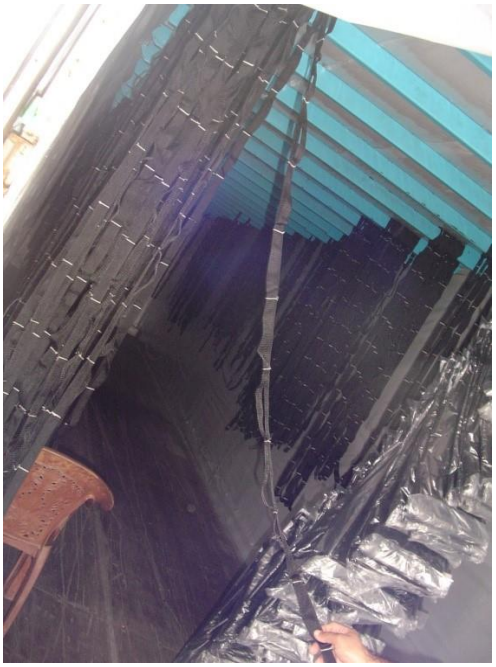

10 Hooks per strap (India)

Straps from Hong Kong, orange or black.

MAERSK

17.07.2019

REF: GOHCONVERSION.1

Instruction for temporary conversion of Dry Containers to GOH Containers
If enough dedicated GOH Containers (Hangertainers) are not available, normal Dry containers may be converted to temporary use as Hangertainers in accordance with the following instruction. Note that costs are now for EMR account, and estimates must be submitted via MERC+.

20ft Dry - Materials required:

4 x Steel angle bar rails - dimensions 50 mm x 50mm x 6.0 mm, length 2825 mm (see Figure 1 below)
10 x Steel backing plates (L section) – dimensions 8-10 mm x 20-25 mm, length 60-70 mm, thickness 6.0 mm (see Figure 2 below)
10 x M10 nuts and bolts, nominal length 40 mm
10 x M10 spring steel washers

40ft and 40ft HC Dry - Materials required:

8 x Steel angle bar rails - dimensions 50 mm x 50mm x 5.0 mm, length 2942 mm (see Figure 1 below)
20 x Steel backing plates (L section) – dimensions 8-10 mm x 20-25 mm, length 60-70 mm (see Figure 2 below)
20 x M10 nuts and bolts, nominal length 40 mm
20 x M10 spring steel washers

Material preparation procedure:

Drill 11 mm or 12 mm diameter holes along the midline of one leg of the Steel angle bar rails to match the spacing of the Top Side Rail Lashing Rings in the container. (See Figure 1.) Spacing of holes approximately 1,116 mm - but make sure to measure the actual spacing of the lashing rings before starting to drill the holes. Note that some containers may have 6 lashing Rings instead of 5 and the spacing will be different for the holes. Remove all burrs and clean rails on completion. Rusty rails may require painting.
Drill 1 x 11 mm or 12 mm diameter hole at the midpoint of the longer leg of each of the backing plates (See Figure 2.). Remove all drilling burrs. Weld 1 x M10 Nut, centered over the hole, to each of the backing plates as shown in Figure 3. Ensure to weld at least half of the circumference of the nut to the backing plate, preferably more. Clean welding residues on completion. Rusty plates may require painting
Hint: Screw the nut on to an M10 bolt inserted through the hole from behind to hold the nut in position for welding.

Rail mounting procedure:

Offer the rails up to the lashing rings with the un-drilled leg at the top as shown in Figure 4.
Place washers on the M10 bolts. Position the backing plates behind the lashing rings, as shown in figure 5, and screw the bolts loosely into the nuts.
When all backing plates are aligned in the correct position tighten all bolts to ensure that the rail does not move.
Standard Maersk Line Hanger Bars may now be mounted on the rails in the same way as for a dedicated Hangertainer.
Note that this is for TEMPORARY mounting of rails only and the rails must be removed on completion of the trip at destination or the next available opportunity if the box is positioned out empty and uninspected. Hanger Bars must be dealt with in accordance with the standard procedure for return of these equipment items.

2) Hanger rail. (50 x 50mm x 6.0mm)

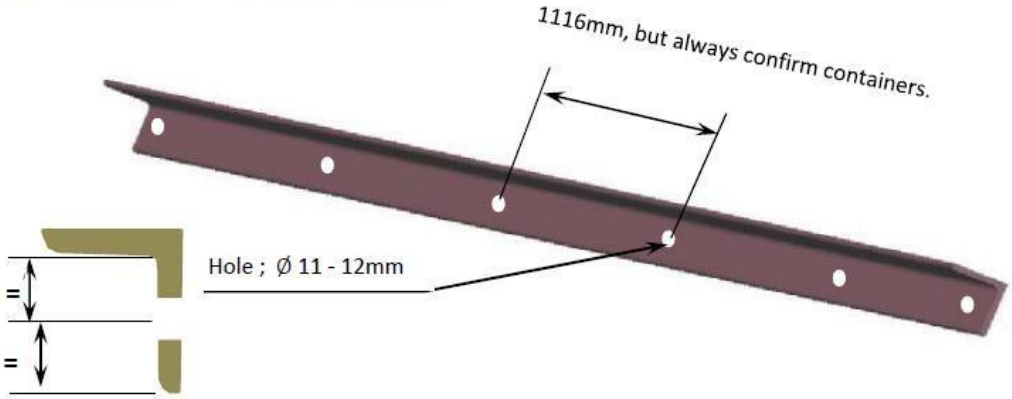

	A x B	t	r_1	r_2	A	kg/m
50×50	50×50	4	6.5	3	3.892	3.06
	50×50	5	6.5	3	4.082	3.77
	50×50	6	6.5	4.5	5.644	4.43

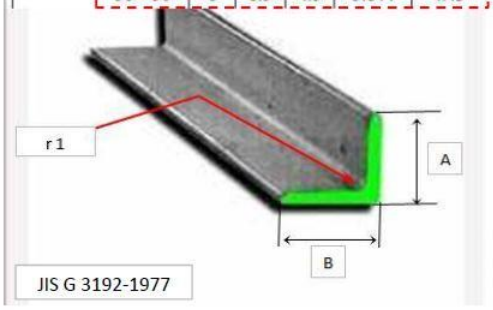

Figure 1: Steel angle bar rails

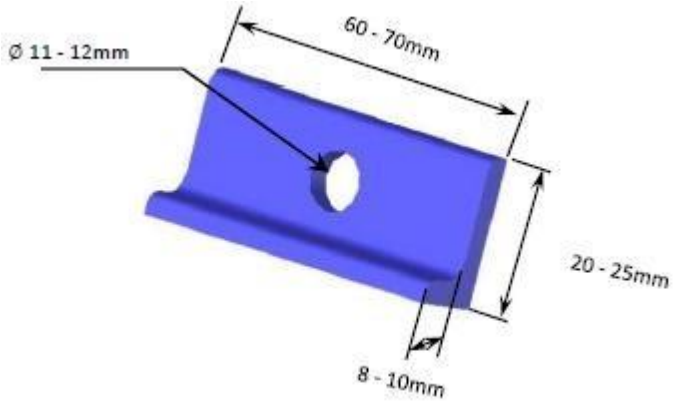

Figure 2: Backing plate

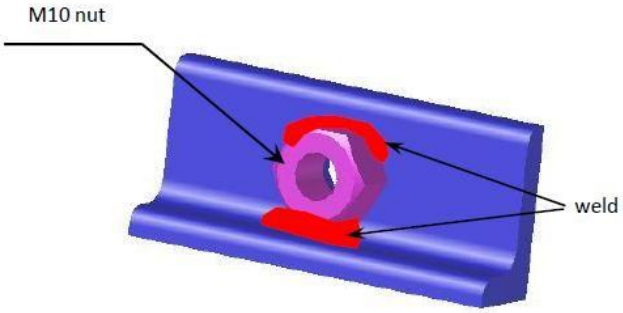

Figure 3: Backing plate with Nut

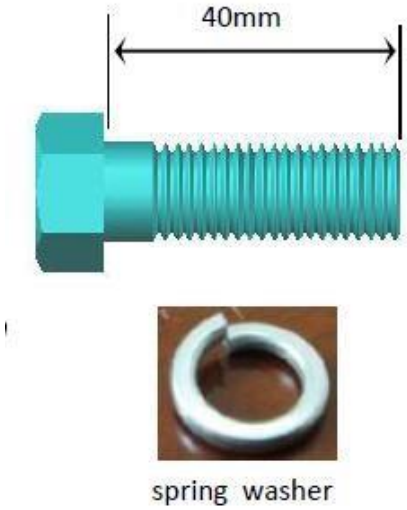

Figure 4: M10 bolt and washer

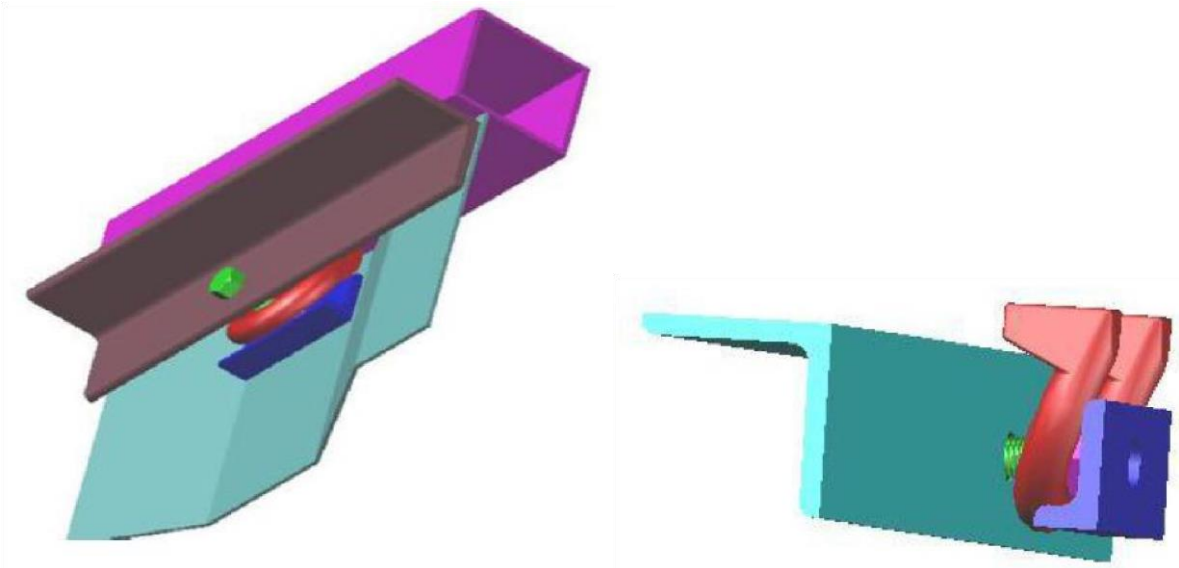

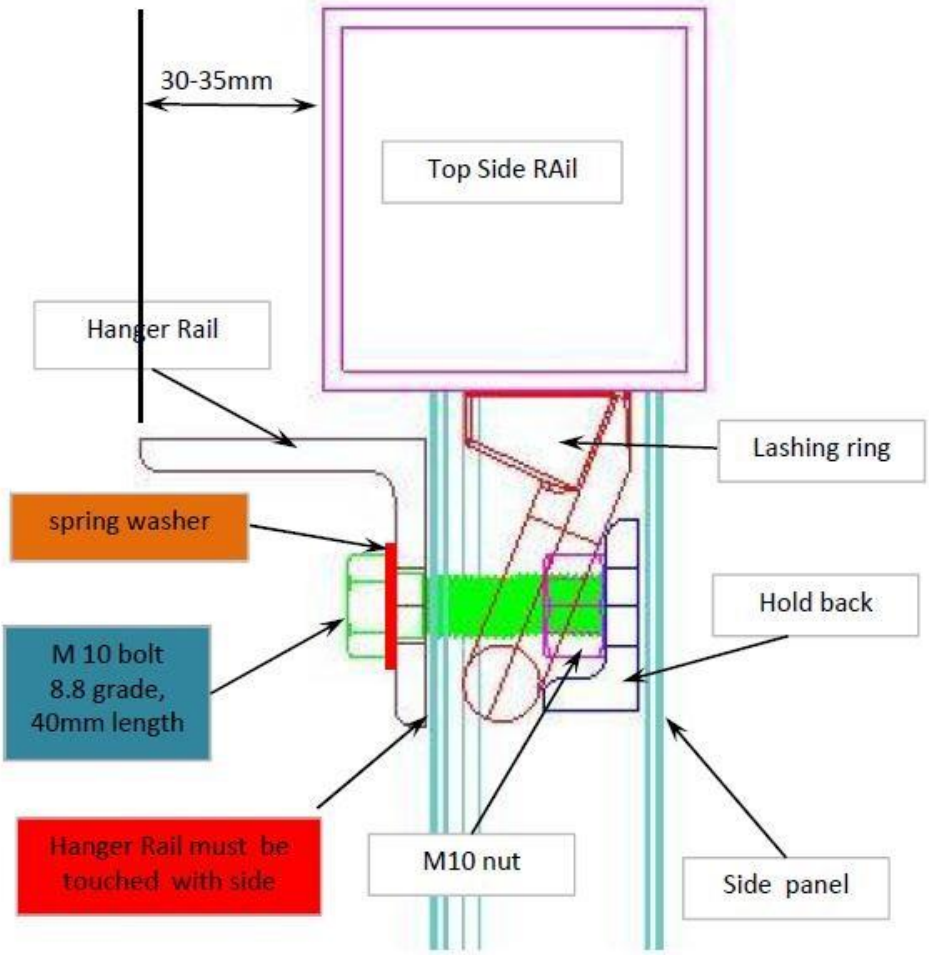

Figure 5: Mounting of Rail using Lashing Ring and Backing Plate

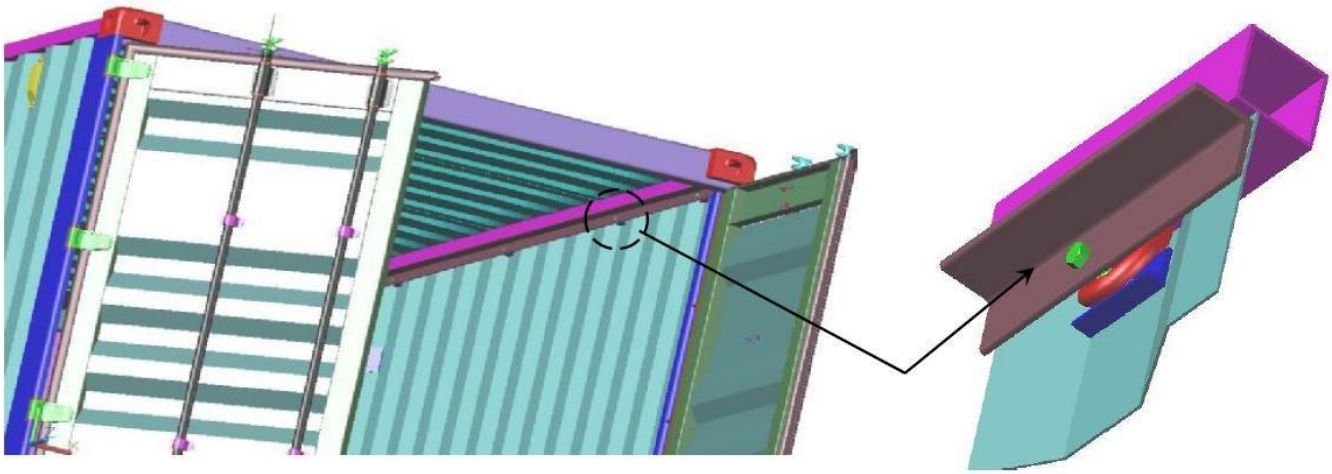

Figure 6: Temporary Hanger Rail installed in container

17.07.2019

STANDARD SPECIFICATION

FOR

HANGER BEAMS/RAILS

TABLE OF DRAWINGS

1. Hanger Rail..... APM 3450
2. Hanger Bar..... APM 3455
3. Hanger Clamp Adjustable ..... APM 3456
4. Hanger Clamp Fixed ..... APM 3457
5. Hanger Beam..... APM 3458

1.0. GENERAL

1.1. General requirements

This specification is informational only and does not constitute a commitment or obligation of any kind on the part of Maersk. It is submitted under a confidential relationship for a specified purpose, and the recipient, by accepting this document, assumes custody and control, and agrees that it will not be copied or reproduced in whole or in part, nor its contents revealed in any manner to any person except to meet the purpose for which it was delivered.

The drawing and every element of the design embodied herein are the exclusive property of the CENEMR. Any patents applied for, pending or assigned, which are needed to manufacture the beams for the Owner, shall be released to the Owner.

If any modifications on principal dimensions and/or technical specifications specified herein are found necessary, CENEMR shall be notified and approve in writing. This shall also apply to any other deviation from the specification.

1.2. Testing

Strength of hanger rails/beams (SWL 1,000 kg) to be tested to 1,500 kg

2.0. HANGER RAILS

In steel containers on the inside of each top rail a hanger rail should be running from corner casting to corner casting just below the roof panel. Two (2) pcs per side for 20 ft and four (4) pcs per side in 40 ft See drawing APM 3450

2.1. Hanger Rail

Profile:	Angle steel 30 x 30 x 4 mm
Material:	St 44.2
Surface:	Hot dip galvanized, after installation add a 50 microns top coat.

2.2. Mounting

The hanger rail shall be mounted 25.0 mm below the roof panel on the side top rail with the horizontal flange at top. The hanger rail shall be secured with 6.4 mm fasteners with a spacing of approximately 200 mm.

2.3. Fasteners

Type:	Closed type (monobolt), T.S > 7,200 N and shear > 9,000 N.
Material:	Steel.
Surface:	Protected e.g. zinc plated or SUS.

2.4. Loads

The described hanger rail installation is designed to carry a load of 11/22 hanger beams, each carrying SWL of 1,000 kg, giving a total of 11,000/22,000 kg uniformly distributed throughout the 20/40 ft container.

3.0. HANGER BEAMS

Hanger beams to be manufactured according to attached drawings. APM 3455, APM 3456, APM 3457 and 3458.

Beams to be e.g. zinc plated. Each beam to be clearly marked SWL 1,000 kg.

The shown design of hanger beams has one loose end on each beam. If found more economical, both ends may be adjustable. If this design is chosen, it should be ensured that the length of the beam can be adjusted over the same range (i.e. 2,210 – 2,290 mm).

4.0. FASTENING

4.1. Steel containers

In steel containers, the rail is fitted along the top rail by means of 6.4 mm mono bolts.

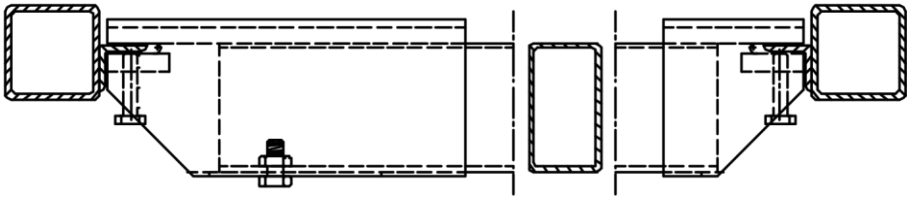

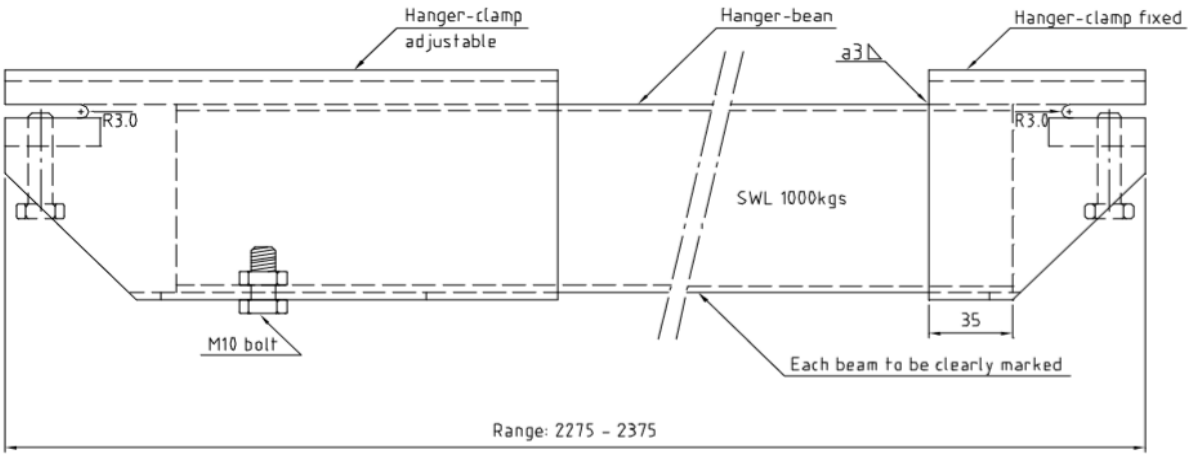

All parts to be surface protected ex. galvanizing.

Suitable for aluminium and steel dry freight containers prepared for hanger bar

Title
HANGER-BAR

Drawing No. APM - 3455

Scale 1 : 2

	Date	Name
Drawn	15.01.2011	LFP
Rev.		
Appr	17.11.2011	EH

MAERSK

Filename T:\EQUIPMNG\FAELLES\Manuals\SPECS\Original\DWG Specs\Under revision\3455.dwg

Classification: Public

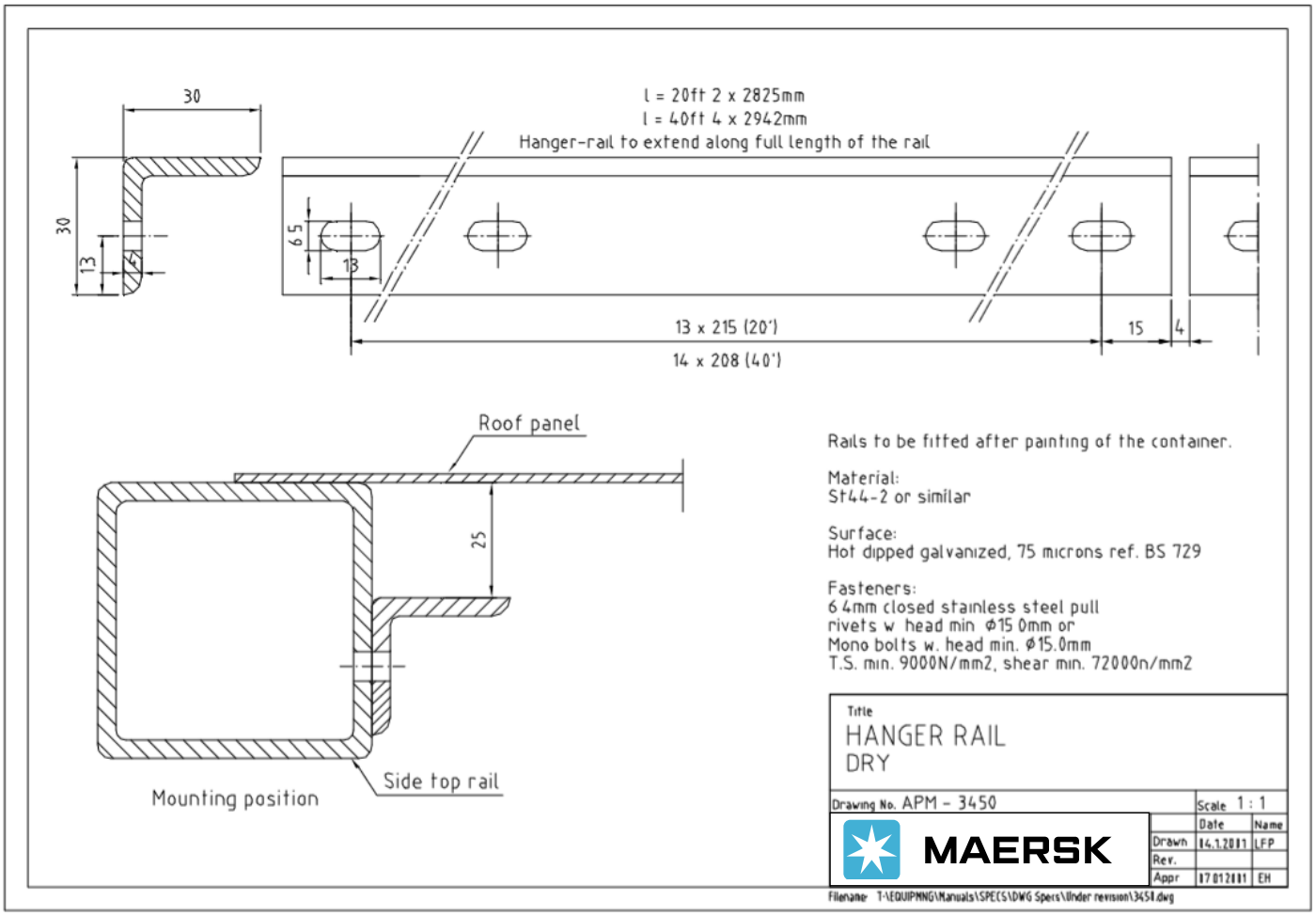

Classification: Public

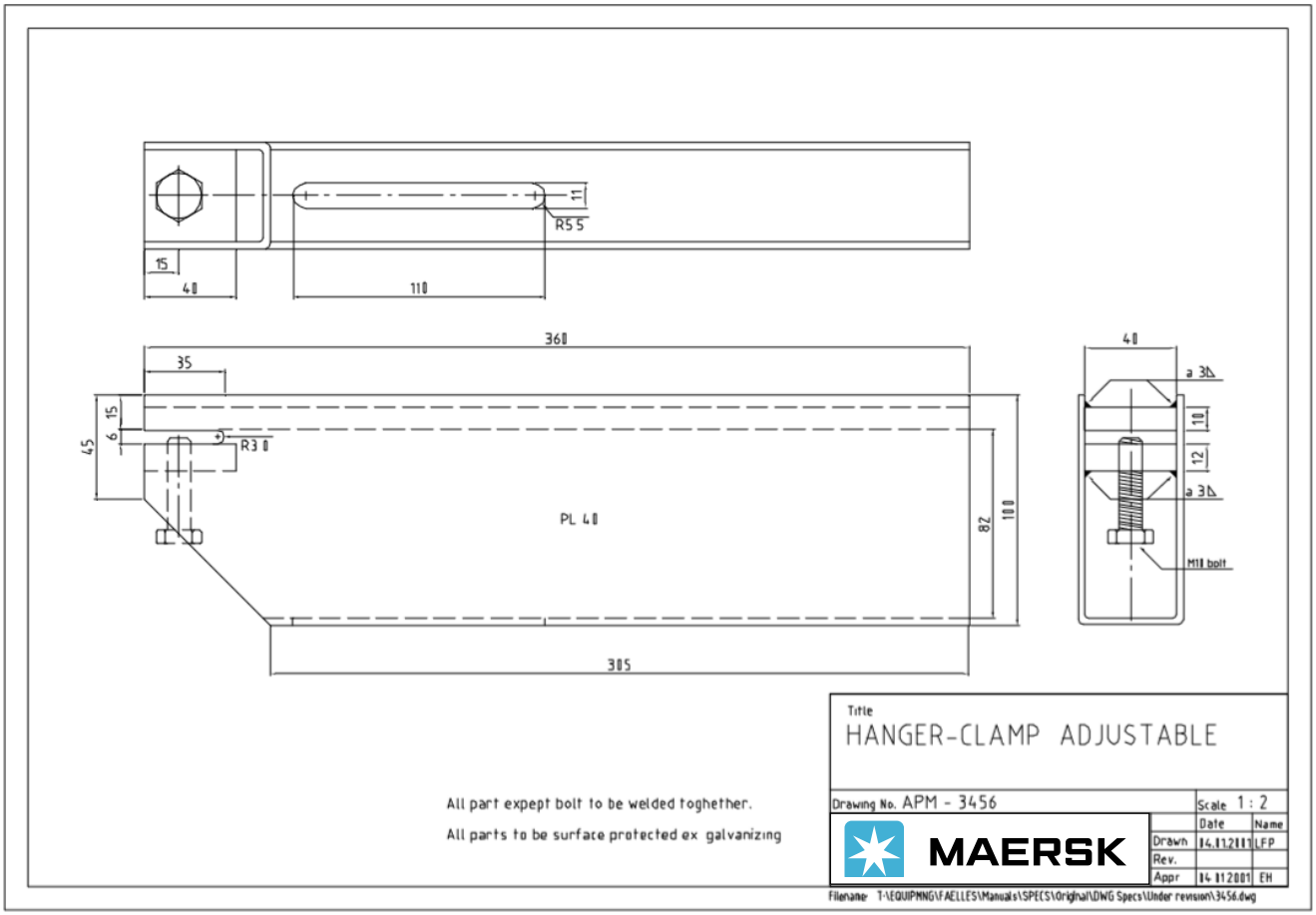

Classification: Public

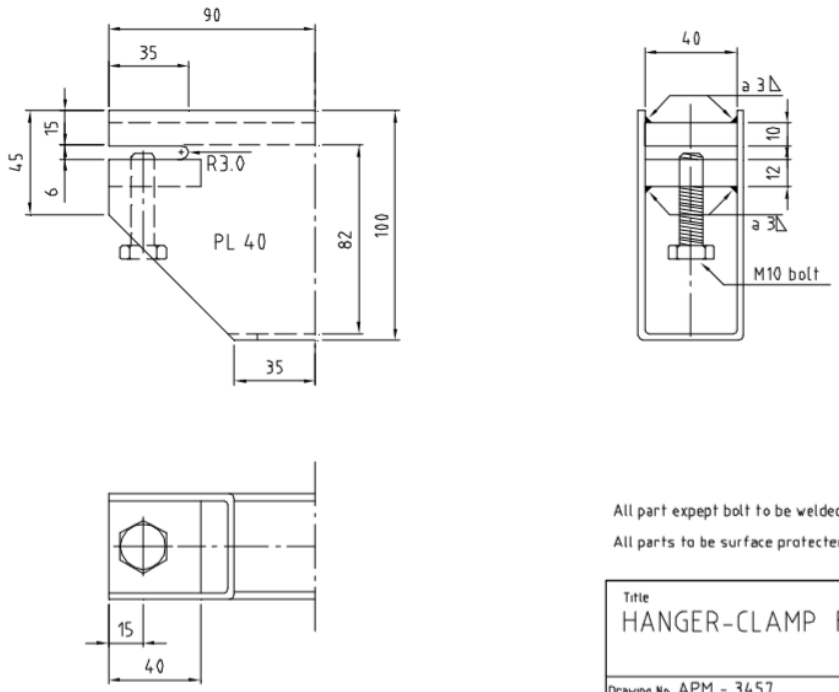

All part expept bolt to be welded toghether.

All parts to be surface protected ex galvanizing

Title

HANGER-CLAMP FIXED

Drawing No. APM - 3457

Scale 1 : 2

	Date	Name
Drawn	14.11.2011	LFP
Rev.		
Appr	07.01.2011	EH

MAERSK

Filename T:\EQUIPMNG\FAELLES\Manuals\SPECS\Original\DWG Specs\Under revision\3457.dwg

Classification: Public

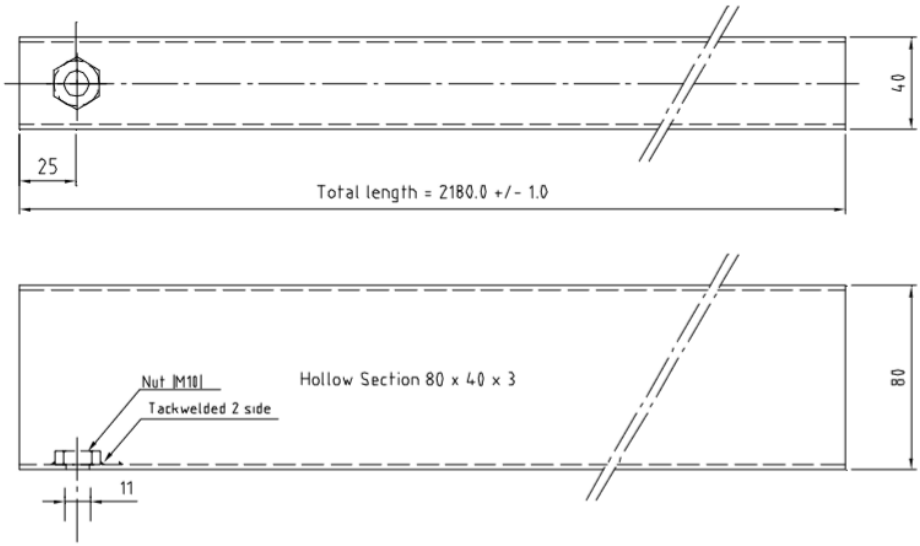

Material. St44-2 or similar

All parts to be surface protected ex. galvanizing.

Title
HANGER-BEAM

Drawing No. APM - 3458

Scale 1 : 2

	Date	Name
Drawn	15.01.2011	LFP
Rev.		
Appr	17.11.2001	EH

MAERSK

Filename T:\EQUIPMNG\FAELLES\Manuals\SPECS\Orginal\DWG Specs\Under revision\3458.dwg

Classification: Public

MAERSK